TYPE	YEAR	PROJECT NO.	SHEET NO.
RESURF.	2014	HSIP-I-24-1(105)	2A

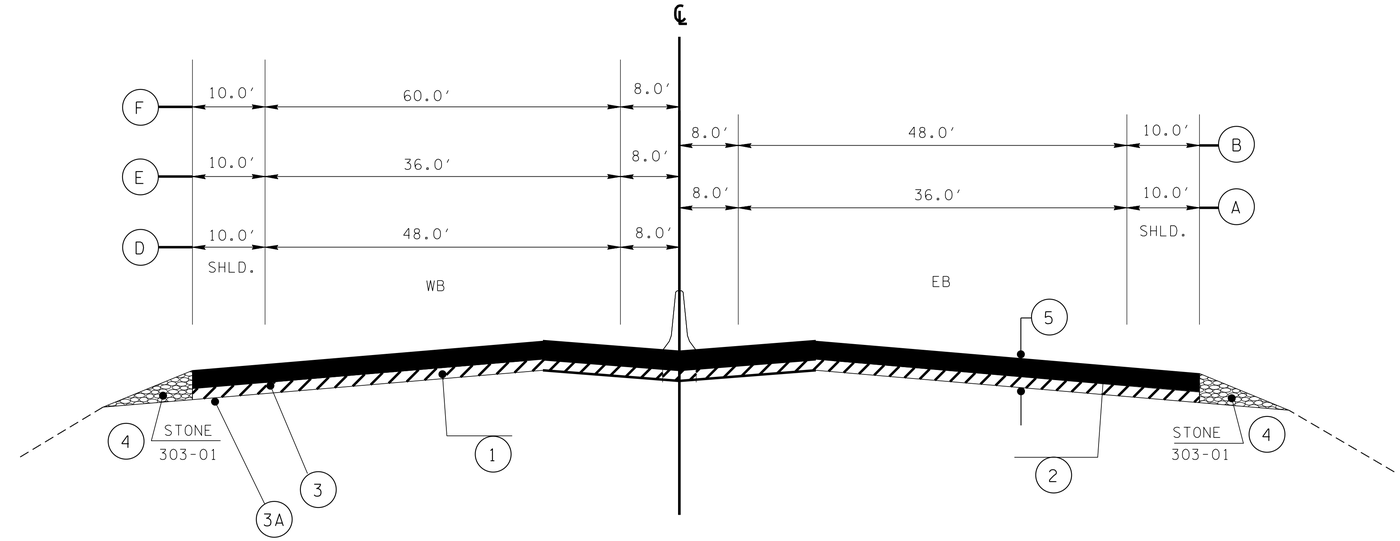

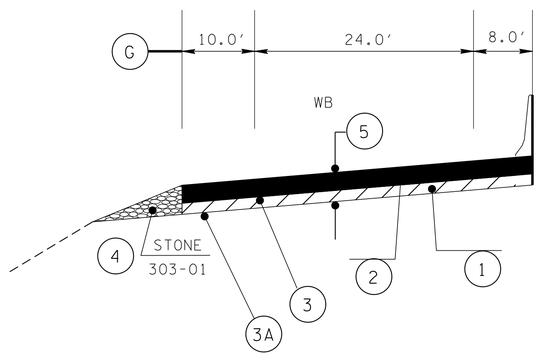

WESTBOUND TYPICAL SECTION

(D) L.M. 14.67-14.80, 14.90-14.97, 15.06-15.17, 15.35-15.45

(E) L.M. 14.80-14.90, 14.97-15.06, 15.17-15.35

(F) L.M. 15.45-15.52

(G) L.M. 15.52-16.19

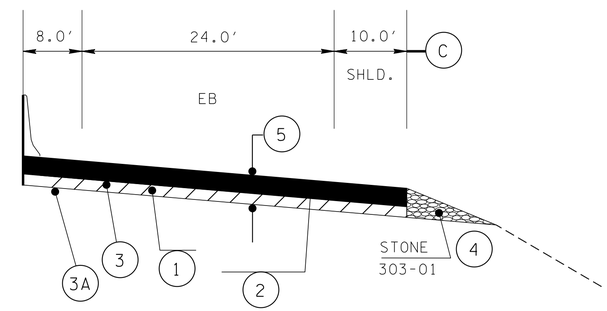

EASTBOUND TYPICAL SECTION

(A) L.M. 14.67-14.93, 15.13-15.23

(B) L.M. 14.93-15.13, 15.23-15.80

(C) L.M. 15.80-16.19

PROPOSED PAVEMENT SCHEDULE

(1) SURFACE @ (85 LB/S.Y.) 411-03.14 ACS MIX PG76-22 THIN LIFT D	(3A) TACK COAT @ 0.10 GAL/SY 403-01 BITUMINOUS MATERIAL FOR TACK COAT (TC)
(2) SURFACE @ 1.25″ THICK (110.0 LB/S.Y.) 411-03.15 ASPHALT CEMENT (PG76-22) FOR OGFC MIX 411-03.16 AGGREGATE FOR OGFC MIX	(4) MINERAL AGGREGATE @ 3.00″ 303-01 MINERAL AGGREGATE, TYPE A BASE, GRADING D
(3) TACK COAT @ 0.07 GAL/SY 403-01 BITUMINOUS MATERIAL FOR TACK COAT (TC)	(5) COLD PLANING @ 1.25″ THICK 415-01.01 COLD PLANING BITUMINOUS PAVEMENT (TON)

CONSTRUCTABILITY FIELD REVIEW

SEALED BY

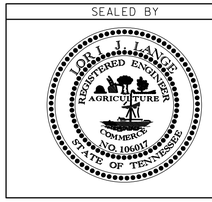

STATE OF TENNESSEE
DEPARTMENT OF TRANSPORTATION

TYPICAL SECTIONS AND PAVEMENT SCHEDULE

0-JAN-2014 14:20
\\JU03WF01.tdot.state.tn.us\03Shared\SURVEY\DESIGN\PIN 118363.00 Davidson I-24 RSAR\Cadd files from Planning\dgn\002A TYPICAL SECTIONS AND PAVEMENT SCHEDULE.dgn