TYPE	YEAR	PROJECT NO.	SHEET NO.
CONST.	2014	HISP-24-1(105)	14

ANCHOR BOLT DETAIL

ASTM F1554 ANCHOR BOLTS
(55KSI, HEADED OR THREADED/NUTTED)TO BE DESIGNED
BY SIGN STRUCTURE MANUFACTURER

REQUIRED BEARING AREA FOR ANCHOR BOLT	
ANCHOR BOLT DIA(IN)	HEAD OR NUT AREA (SQ IN)
1"	1.800
1¼"	2.812
1½"	4.050
1¾"	5.512
2"	7.199
2¼"	9.122
2½"	11.249

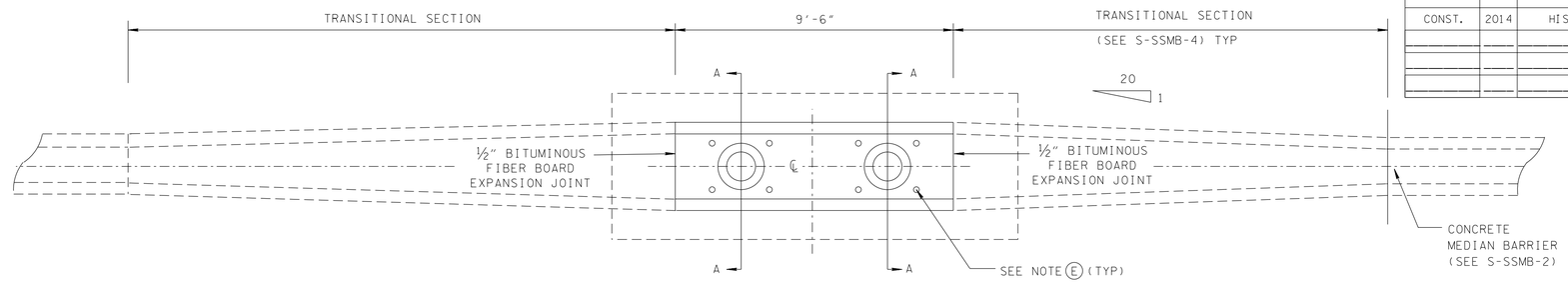

PLAN

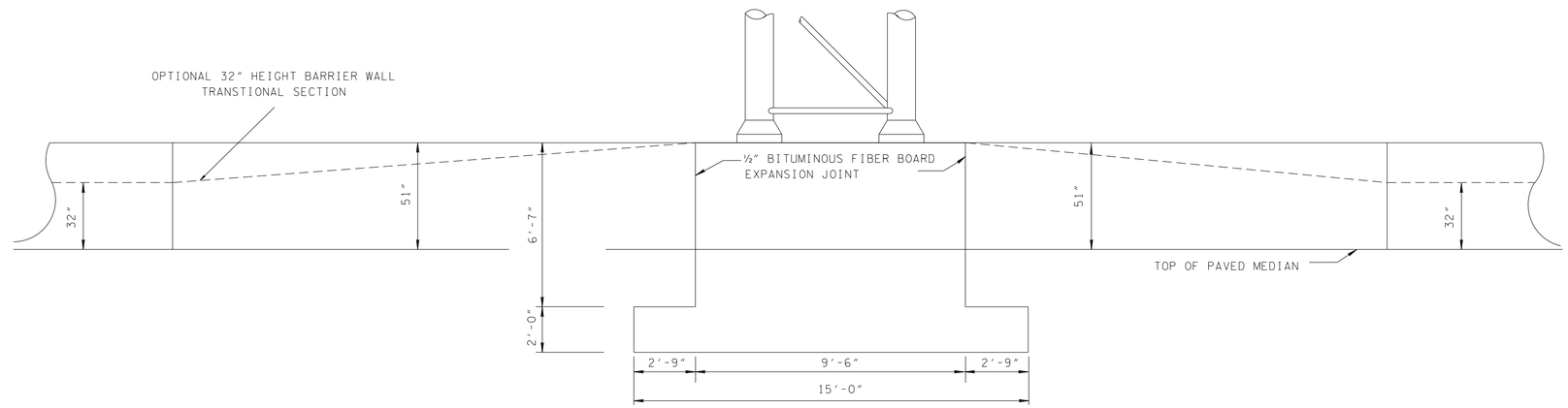

ELEVATION

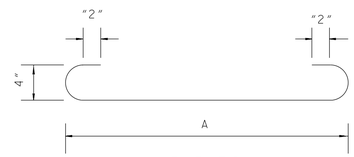

D BARS

L BARS

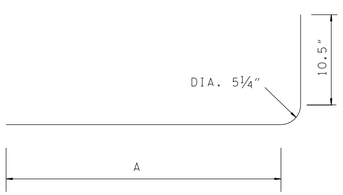

C BARS

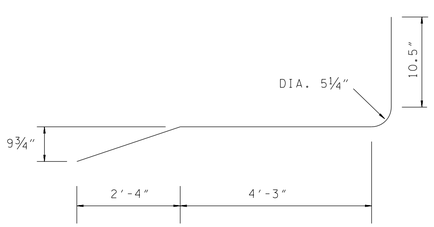

BARS CA 700

BAR DETAIL

BILL OF STEEL - PER FOOTING				
BAR	SIZE	NO. REQ'D.	DIM "S"	LENGTH
C 700	7	4	8'-2"	9'-3"
CA 700	7	20		9'-1"
D 400	4	6	14'-6"	15'-6"
D 401	4	15	5'-6"	6'-6"
L 400	4	3	2'-1"	22'-2"
L 401	4	1	2'-2"	23'-0"
L 402	4	1	2'-8"	24'-0"
L 403	4	1	3'-1"	25'-10"
L 404	4	3	3'-7"	25'-10"

QUANTITIES	
CLASS "A" CONCRETE	13.3 C.Y.
REINFORCING STEEL	658 LB.

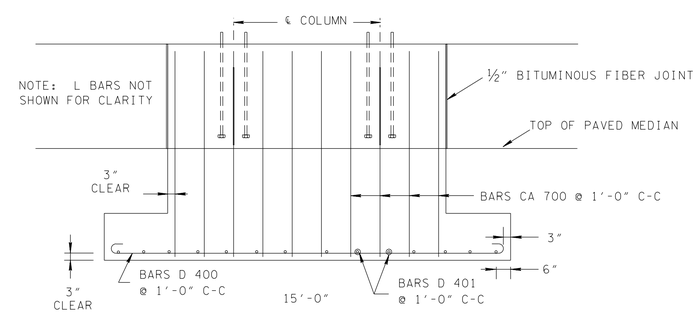

FOOTING

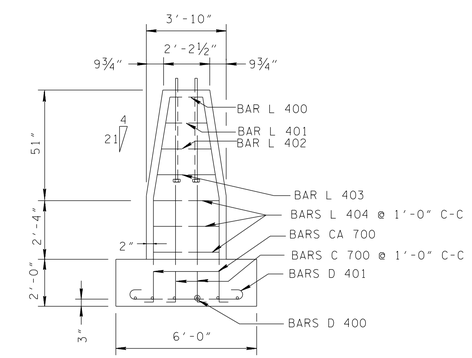

SECTION "A-A"

GENERAL NOTES

Ⓐ FINISHED CONCRETE SURFACES: CONCRETE FINISHING SHALL BE IN ACCORDANCE WITH SECTION 604.22 OF THE TENNESSEE STANDARD SPECIFICATIONS EXCEPT AS MODIFIED BY THE SPECIAL PROVISION NO. 130 REGARDING SECTION 604-CONCRETE STRUCTURES. A TEXTURED COATED FINISH SHALL BE USED IN LIEU OF A CLASS 2 FINISH. THE COLOR OF THE FINISH SHALL BE SIMILAR TO WHITE FEDERAL SPECIFICATION NO. 37778, A COLOR SAMPLE SHALL BE SUBMITTED TO THE MATERIALS AND TEST ENGINEER FOR APPROVAL.

Ⓑ EPOXY COATED DOWEL BARS WILL BE PERMITTED AS AN ALTERNATE TO PAINTED AND GREASED DOWEL BARS. THE EPOXY COATING SHALL BE AN APPROVED HIGH DENSITY POLYETHYLENE 17 MILS (± 2 MILS) BONDED TO THE BAR WITH AN APPROVED ADHESIVE 1 TO 8 MILS THICK (4 MILS NOMINAL).

Ⓒ IF A STORM DRAINAGE SYSTEM IS PLACED UNDER THE CENTER LINE OF THE MEDIAN BARRIER, THE PIPE SHALL BE SHIFTED HORIZONTALLY AROUND THE FOOTING.

Ⓓ OVERHEAD SIGN FOOTING COST IS TO BE INCLUDED IN THE COST OF THE OVERHEAD SIGN STRUCTURE.

Ⓔ LOCATION OF ANCHOR BOLTS TO BE DETERMINED IN THE FIELD BY THE ENGINEER TO MATCH SIGN STRUCTURE MANUFACTURERS SHOP DRAWING.

Ⓕ ANCHOR BOLTS, NUTS AND WASHERS ARE TO BE GALVANIZED STEEL.

Ⓖ CONCRETE: F_c = 4000 POUNDS PER SQUARE INCH AT 28 DAYS.
REINFORCING STEEL: ASTM A615, F_y = 60,000 POUNDS PER SQUARE INCH
ALL REINFORCEMENT IS TO BE INSTALLED AS DETAILED ON THIS DRAWING .

STATE OF TENNESSEE
DEPARTMENT OF TRANSPORTATION

FOOTING DETAILS FOR OVERHEAD SIGN STRUCTURE 51" MEDIAN BARRIER WALL

12/20/2013 10:41:40 AM
C:\D Drive\JJ0059\Drive\davidson co\I-24 f-sr6 t- I-40ramp med.barrier footing detail.dgn